XBAR2-LED

LED Area Light

SPECIFICATIONS*	XBAR2-LED100	XBAR2-LED150
Watts	101	154
Lumens	12523	18686
Efficacy lm/W	124	121.7
Replaces Up To	250W MH	400W MH
Colour Temp	4000K(standard), 5000K (option)	
Operating Temp	-40˚C to +50˚C	
Voltage	120-277V , 480V	
Certification	cULus, IP65 , DLC Premium	
Housing Material	Die Cast Aluminum	
Lens	Clear Polycarbonate Lens	
Power Factor	>0.9	
Mounting	post top - fits a 3" tenon	
THD	15%	
CRI	>80	

DESCRIPTION

The XBAR-LED Series is a slim, round post top area light with a rugged design, available in 4000K and 5000K ideal for parking lots, commercial plazas, and general area lighting.

APPLICATIONS

Parking Lots

Area Lighting

Commercial Plaza

FEATURES

- Ruggedly designed with die cast aluminum housing and polycarbonate lens.
- Fixture has been designed to fold neatly to minimize packaging footprint.
- Optional twist lock photocell
- High efficacy fixtures at over 120 lumens per watt.
- Replaces 250W and 400W MH post top fixtures.

DIMENSIONS - XBAR2

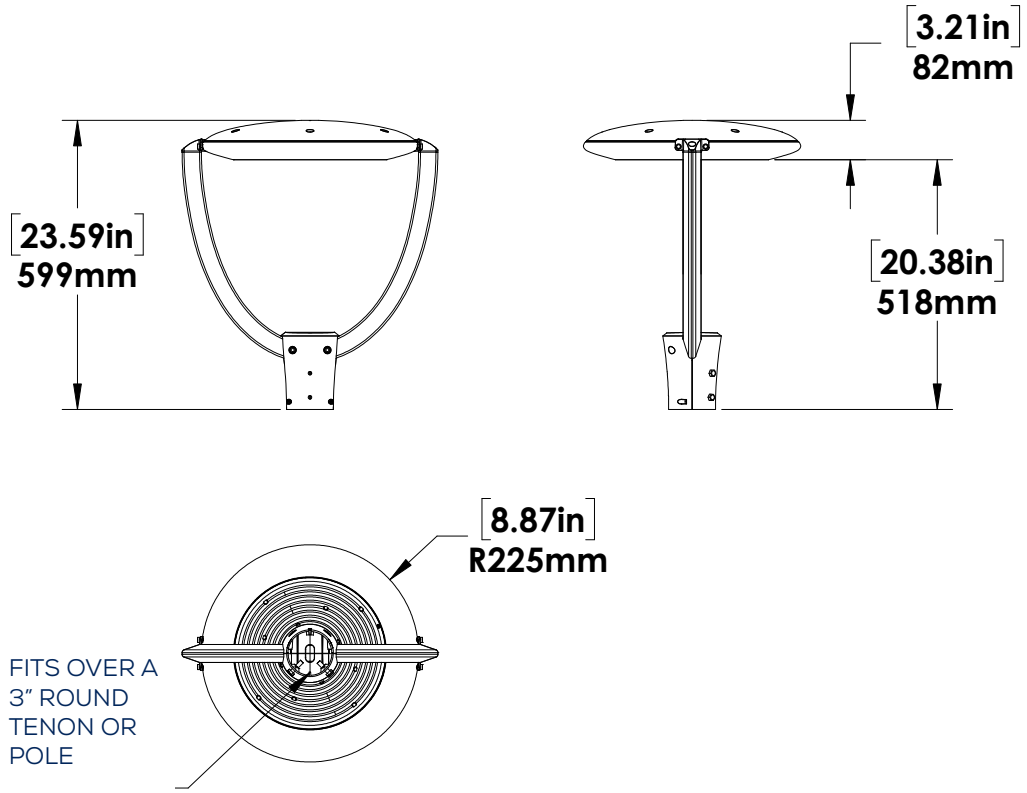

WEIGHT: 14.3lbs

SURGE PROTECTION & AMPERAGE DRAW

	CURRENT (A)					SURGE PROTECTION (KV)	
	120V	208V	240V	277V	480V	120-277V	480V
XBAR2-LED100	0.88A	0.51A	0.44A	0.38A	0.22A	10kV	10kV
XBAR2-LED150	1.32A	0.76A	0.66A	0.57A	0.33A	10kV	10kV

LUMEN MAINTENANCE			
Hours	50,000	75,000	100,000
XBAR2-LED100	90%	88%	81%
XBAR2-LED150	90%	88%	81%

EPA	
	0° Tilt
XBAR2	1.29

COMPACT FOLDING DESIGN FOR REDUCED PACKAGING FOOTPRINT

PHOTOMETRICS

XBAR2-LED100-B-4K-90DEG-BLK-DIM-PCL MOUNTED AT 20 FEET

Total Lumens 12522.7 Mounting Height 20 Feet Maximum Calculated Value 13.17 FC

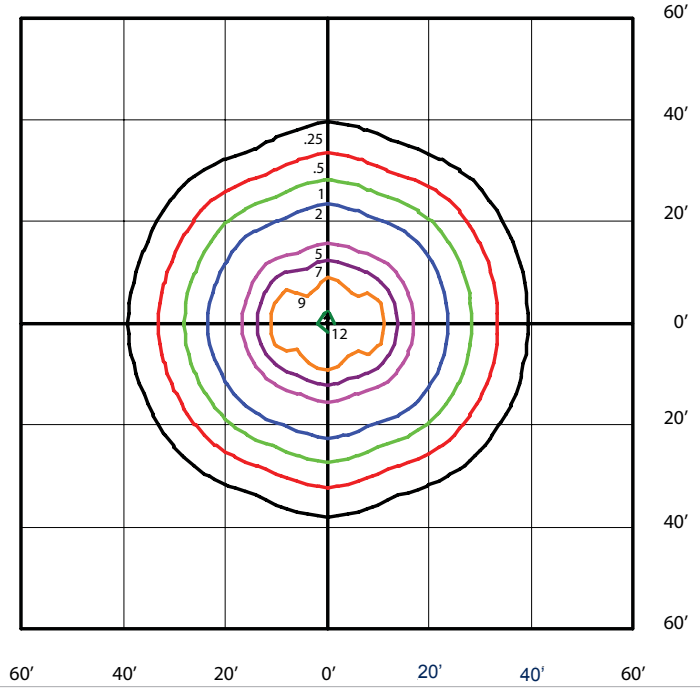

XBAR2-LED150-B-4K-90DEG-BLK-DIM-PCL MOUNTED AT 24 FEET

Total Lumens 18686.3 Mounting Height 24 Feet Maximum Calculated Value 13.47 FC

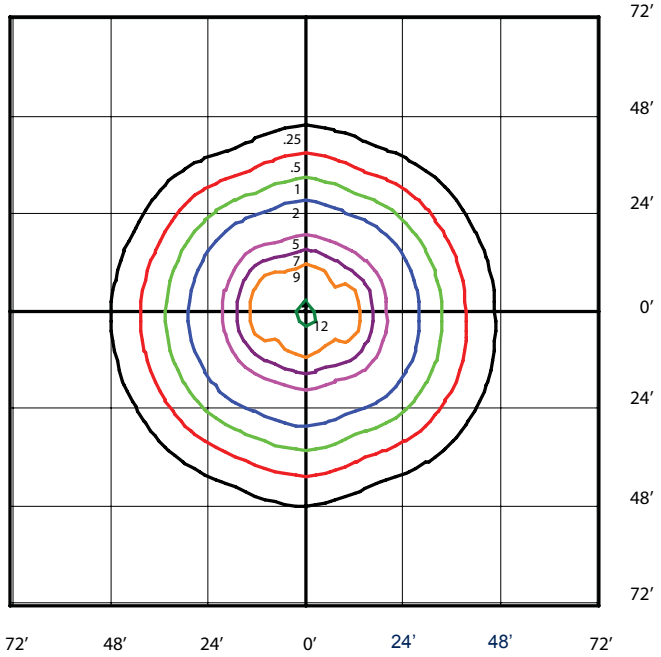

SPECIFICATIONS

MODEL DESCRIPTION	VOLTAGE (V)	INPUT POWER (W)	LIGHT OUTPUT	EFFICACY (Lm/W)	THD	PF	CCT (K)	CRI
XBAR2-LED100-B-4K-90DEG-XXX-DIM-PCL	120-277	101	12523	124.4	15.0	0.900	4000	80.0
XBAR2-LED100-B-5K-90DEG-XXX-DIM-PCL	120-277	101	12707	125.8	15.0	0.900	5000	80.0
XBAR2-LED150-B-4K-90DEG-XXX-DIM-PCL	120-277	154	18686	121.7	15.0	0.900	4000	80.0
XBAR2-LED150-B-5K-90DEG-XXX-DIM-PCL	120-277	154	18938	123.2	15.0	0.900	5000	80.0
XBAR2-LED100-L-4K-90DEG-XXX-DIM-PCL	480	97	12445	128.4	15.0	0.900	4000	80.0
XBAR2-LED100-L-5K-90DEG-XXX-DIM-PCL	480	97	12688	130.2	15.0	0.900	5000	80.0
XBAR2-LED150-L-4K-90DEG-XXX-DIM-PCL	480	147	18351	125.2	15.0	0.900	4000	80.0
XBAR2-LED150-L-5K-90DEG-XXX-DIM-PCL	480	147	18642	126.9	15.0	0.900	5000	80.0

LEGEND

B - 120V–277V, L-480V
4K - 4000K, 5K - 5000K
90DEG - 90° Beam distribution
XXX - HOUSING FINISH
DIM - 0-10V Dimming
PCL - Polycarbonate lens

ORDERING GUIDE

XBAR2				90DEG		DIM		PCL
	WATTS	VOLTAGE	COLOR TEMP.	OPTICS	FINISH	DIM	CONTROLS	LENS
	LED100 LED150	B - 120 - 277V* L-480V	4K-4000K* 5K -5000K	90DEG- 90 DEGREE*	BLK- MATTE BLACK* CC- CUSTOM FINISH	DIM - 0-10V DIMMING*	PC - DUSK TO DAWN ON/OFF PHOTOCELL 7PIN- 7PIN SOCKET FOR SMART CONTROL SYSTEMS	PCL - POLYCARBONATE LENS*

*Standard Configuration.