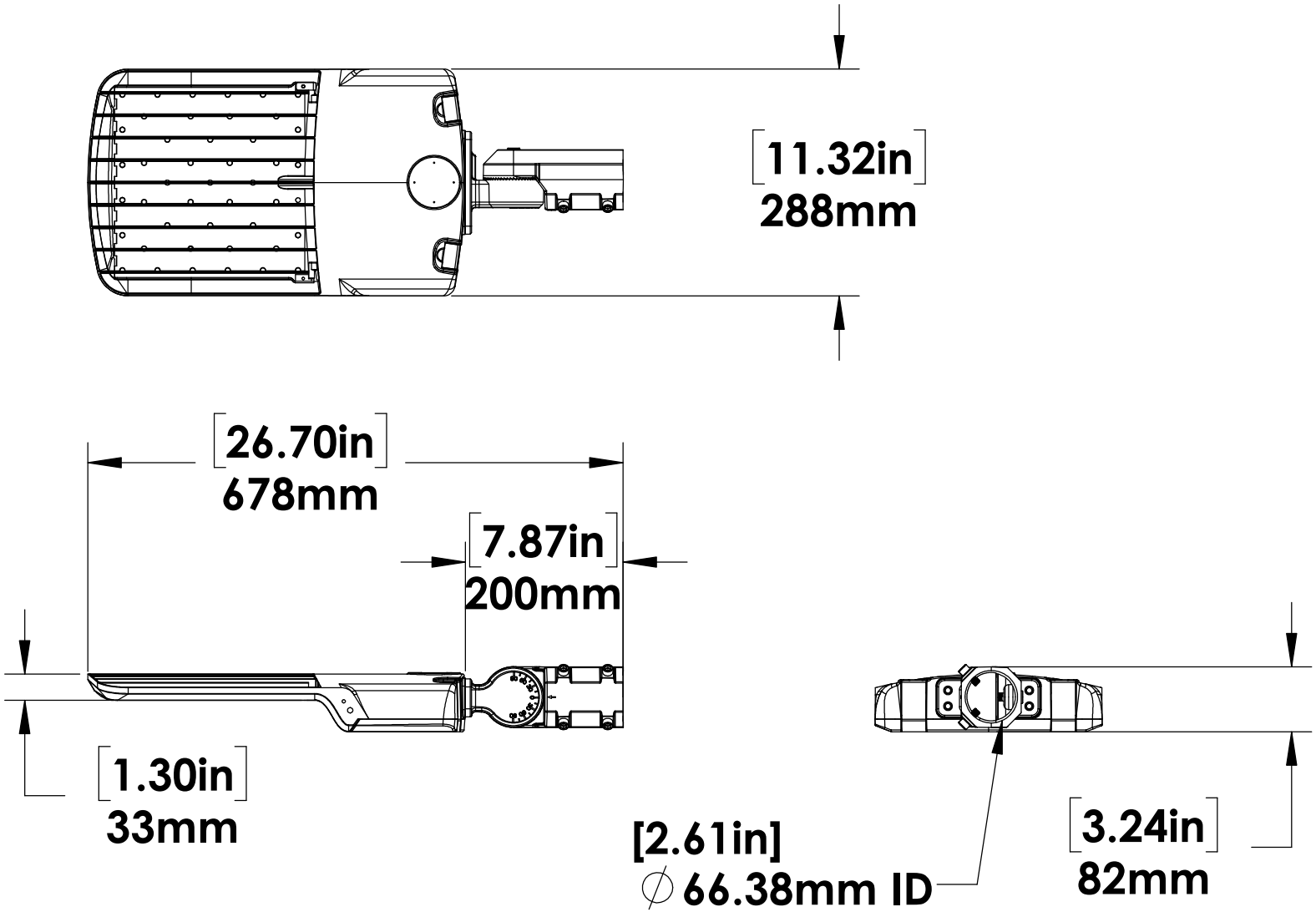
[11.32in]
288mm
[26.70in]
678mm
[7.87in]
200mm
[1.30in]
33mm
[2.61in]
∅ 66.38mm ID
[3.24in]
82mm