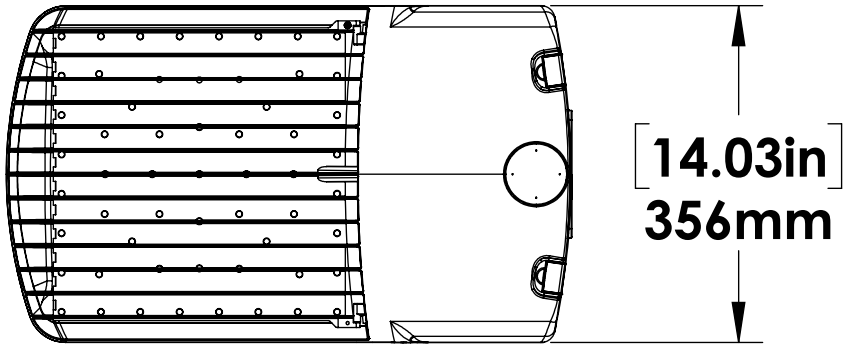
[14.03in]
356mm

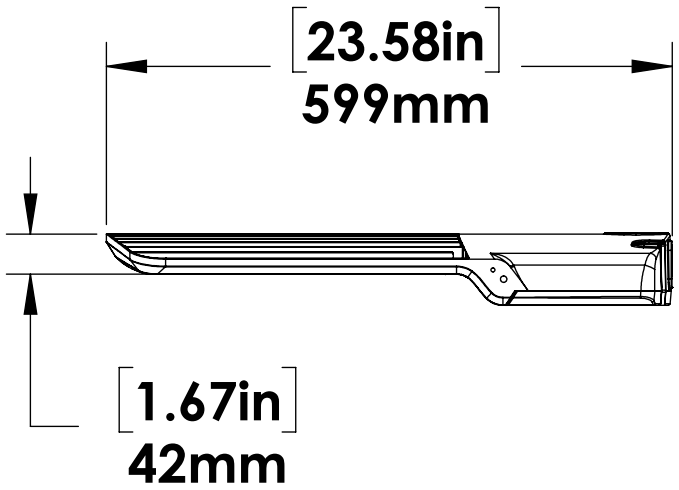
[23.58in]
599mm
[1.67in]
42mm

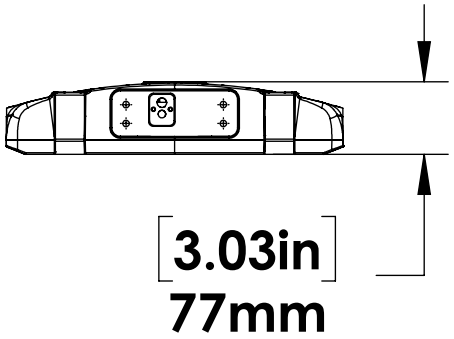
[3.03in]
77mm