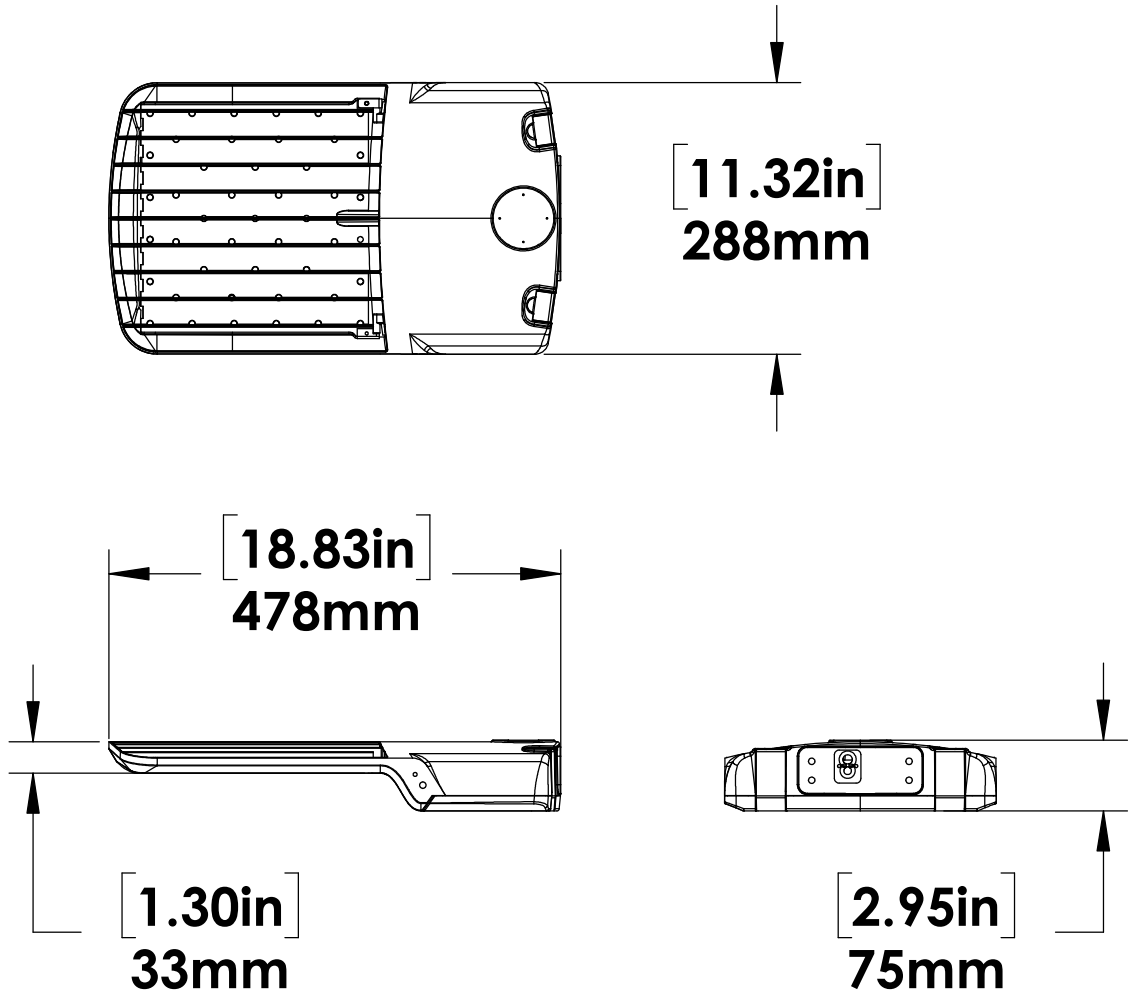
[11.32in]
288mm
[18.83in]
478mm
[1.30in]
33mm
[2.95in]
75mm