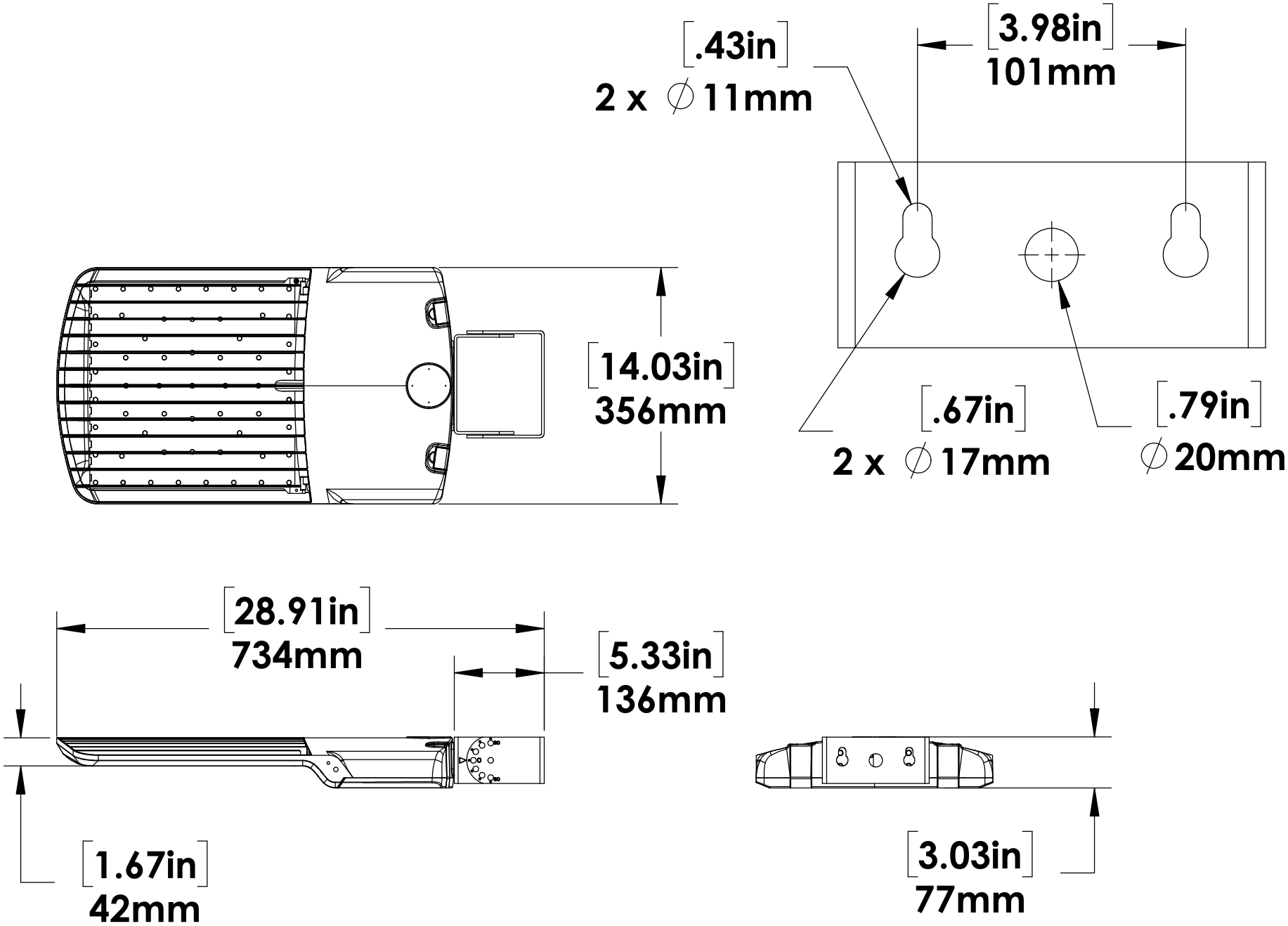
[.43in]
2 x ∅11mm
[3.98in]
101mm
[14.03in]
356mm
[.67in]
2 x ∅17mm
[.79in]
∅20mm
[28.91in]
734mm
[5.33in]
136mm
[1.67in]
42mm
[3.03in]
77mm