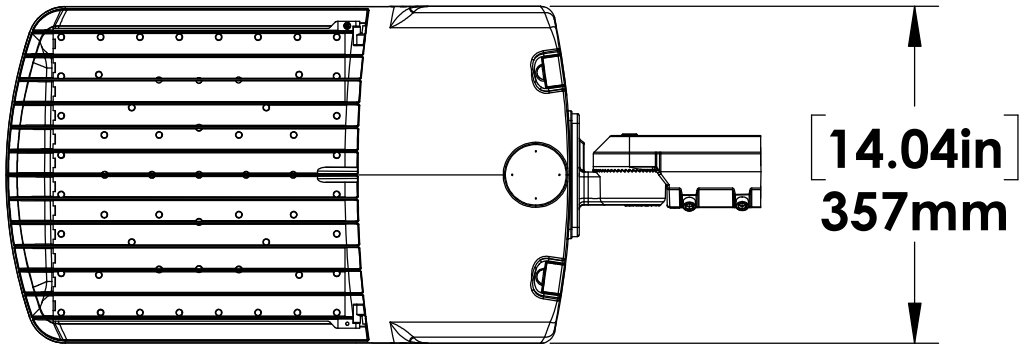
[14.04in]
357mm

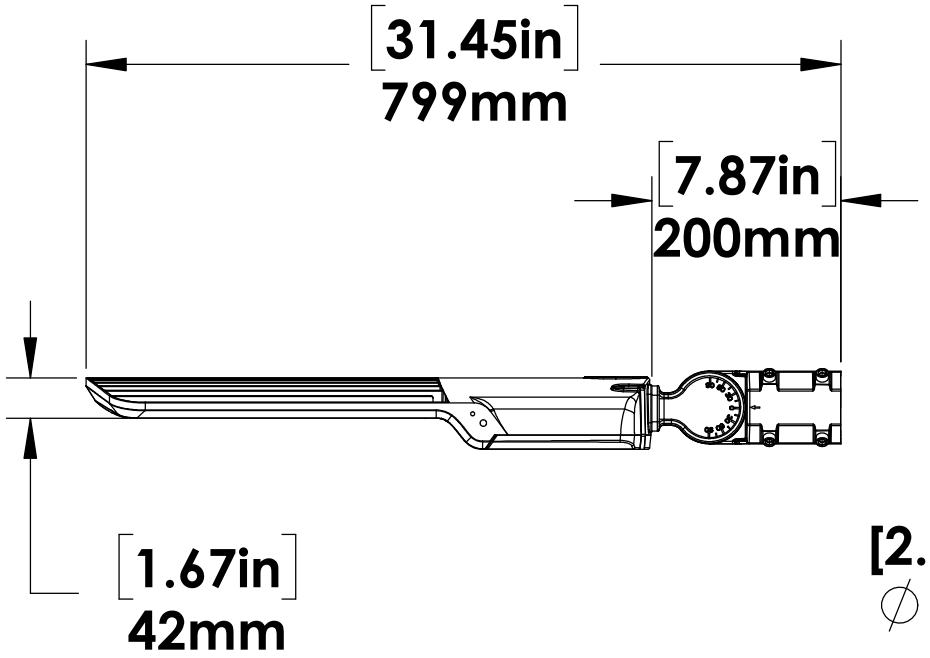
[31.45in]
799mm
[7.87in]
200mm
[1.67in]
42mm

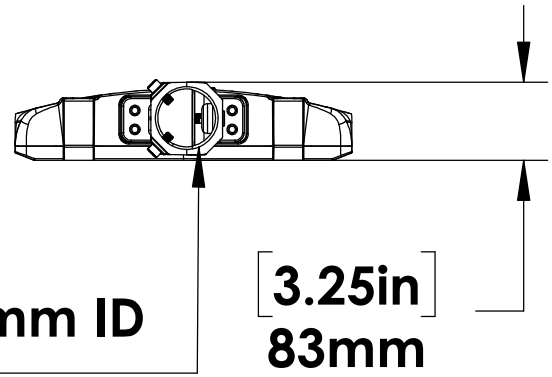
[2.61in]
∅66.38mm ID
[3.25in]
83mm