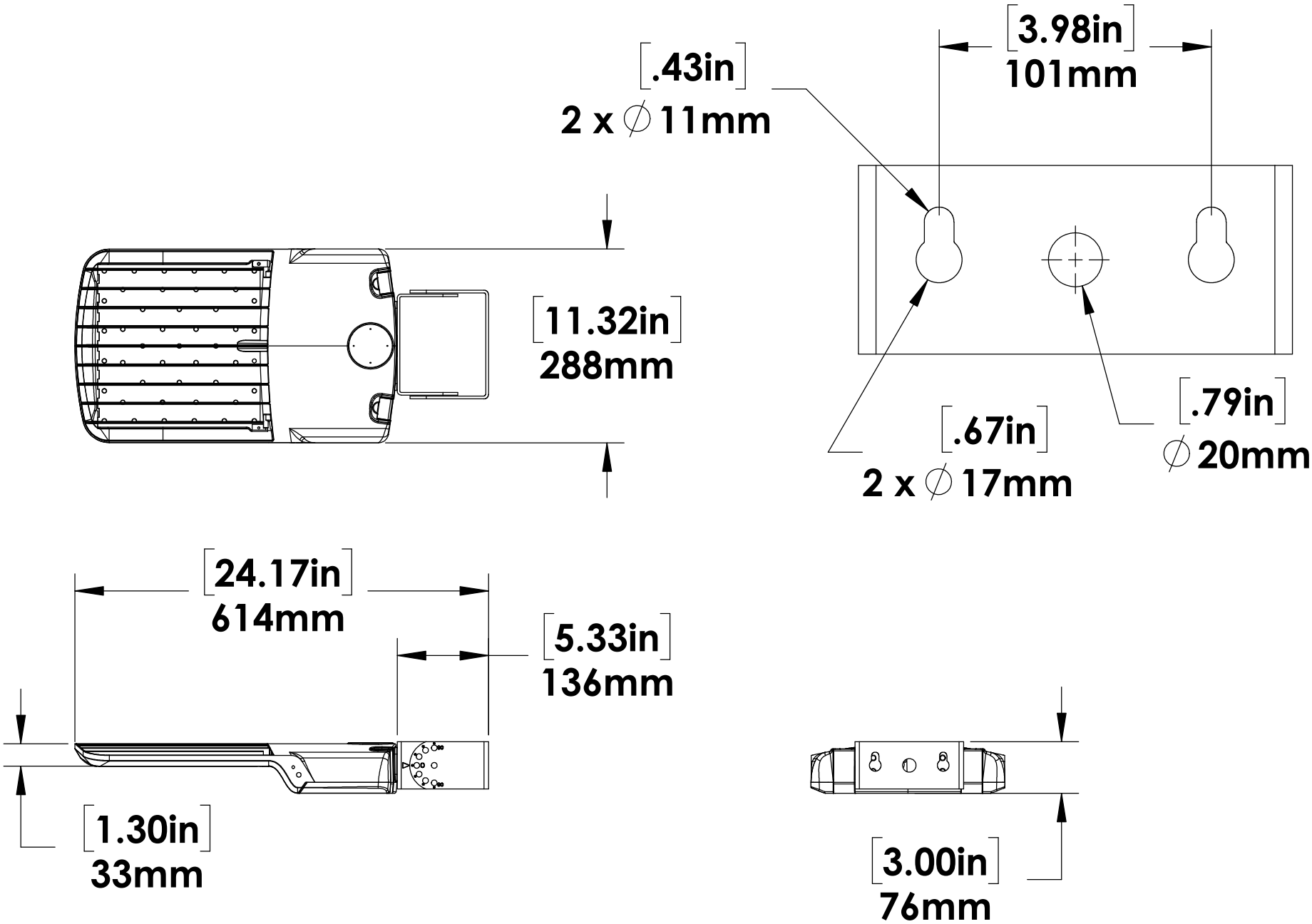
[.43in]
2 x ∅ 11mm
[3.98in]
101mm
[11.32in]
288mm
[.67in]
2 x ∅ 17mm
[.79in]
∅ 20mm
[24.17in]
614mm
[5.33in]
136mm
[1.30in]
33mm
[3.00in]
76mm